MODEL FOR SELF-CUTTING OF A COLLAR FOR WATERPROOF LAYERS
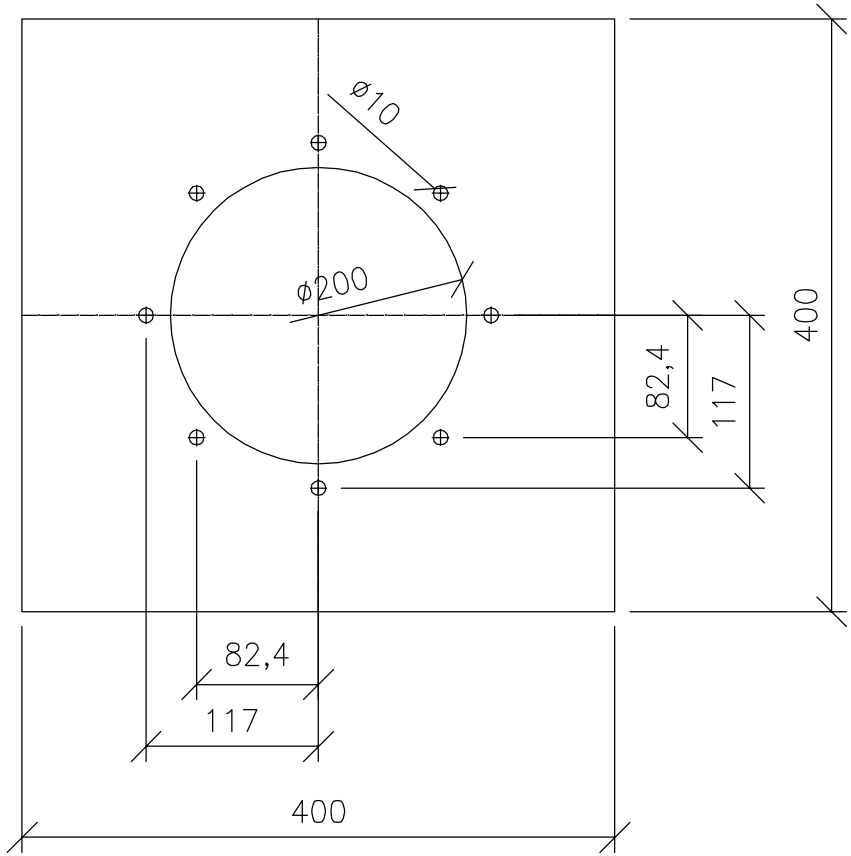
USAGE FOR
- DRAINS: HL615(.1), HL616(.1)
- EXTENSION: HL618
- SEALING KIT: HL86.0